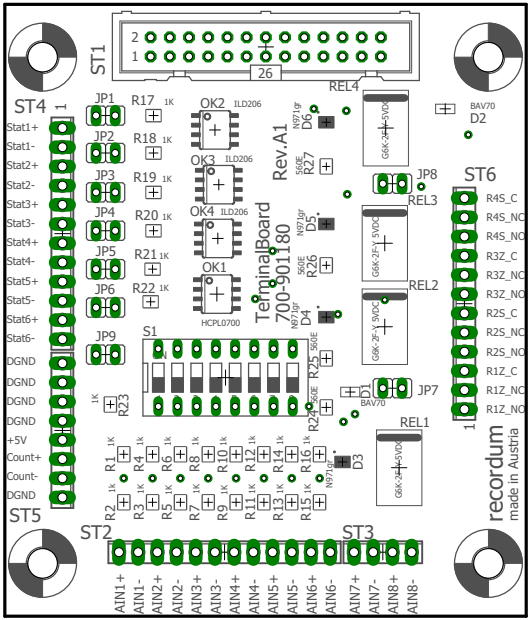

25.10.2018 15:43 R:\Kalibrator\EagleFilesKalibra\TerminalBoard\TerminalBoard.brd