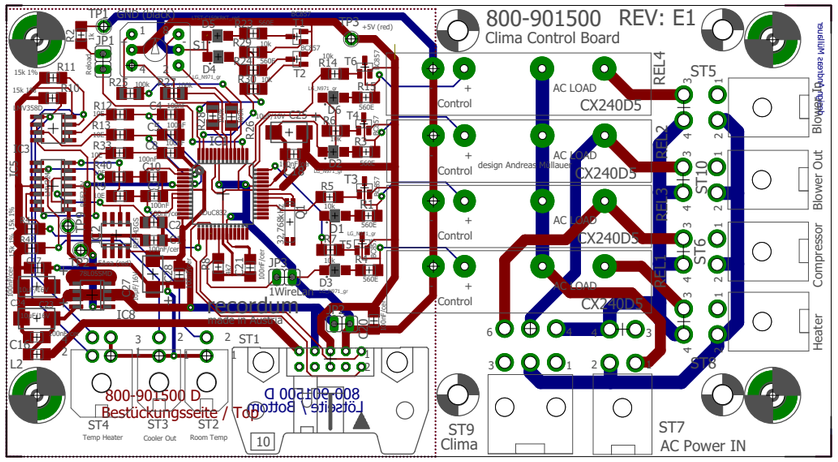

24.10.2018 16:10 R:\Airpointer\EagleFilesRuck\Clima_Control\ClimaControl.brd